# Technical data sheet B278

2-way, Characterized Control Valve, Stainless Steel Ball and Stem

5-year warranty

## Type overview

| Type | DN |
|---|---|
| B278 | 80 |

## Technical data

| | | |
|---|---|---|
| **Functional data** | Valve size [mm] | 3" [80] |
| | Fluid | chilled or hot water, up to 60% glycol |
| | Fluid Temp Range (water) | 0...212°F [-18...100°C] |
| | Body Pressure Rating | 400 psi |
| | Close-off pressure Δps | 100 psi |
| | Flow characteristic | equal percentage |
| | Pipe connection type | Internal thread<br>NPT (female) |
| | Servicing | maintenance-free |
| | Flow Pattern | 2-way |
| | Leakage rate | 0% for A – AB |
| | Controllable flow range | 75° |
| | Cv | 130 |
| **Materials** | Valve body | Nickel-plated brass body |
| | Stem | stainless steel |
| | Stem seal | EPDM (lubricated) |
| | Seat | PTFE |
| | Characterized disc | TEFZEL® |
| | O-ring | EPDM (lubricated) |
| | Ball | stainless steel |
| **Suitable actuators** | Non-Spring | ARB(X) |
| | Spring | AFRB(X) |

## Safety notes

- WARNING: This product can expose you to lead which is known to the State of California to cause cancer and reproductive harm. For more information go to www.p65warnings.ca.gov

## Product features

**Application**

This valve is typically used in air handling units on heating or cooling coils, and fan coil unit heating or cooling coils. Some other common applications include Unit Ventilators, VAV box re-heat coils and bypass loops. This valve is suitable for use in a hydronic system with variable flow.

### Flow/Mounting details

Two-way valves should be installed with the disc upstream.

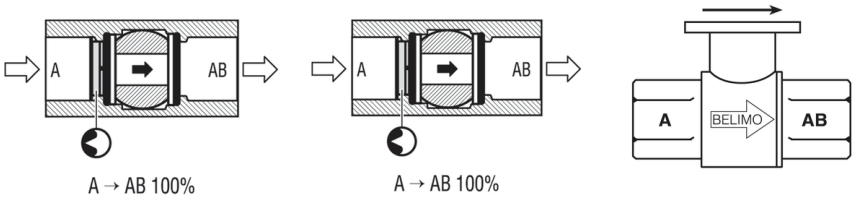


## Dimensions

| Type | DN | Weight |
|---|---|---|
| B278 | 80 | 9.0 lb [4.1 kg] |

ARB, ARX

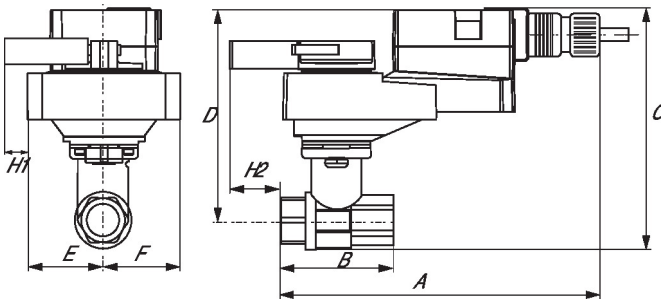


| A | B | C | D | E | F | H1 | H2 |
|---|---|---|---|---|---|---|---|
| 11.0" [280] | 5.8" [148] | 8.5" [217] | 6.0" [152] | 2.8" [71] | 2.8" [71] | 2.1" [53] | 0.8" [20] |

AFRB, AFRX

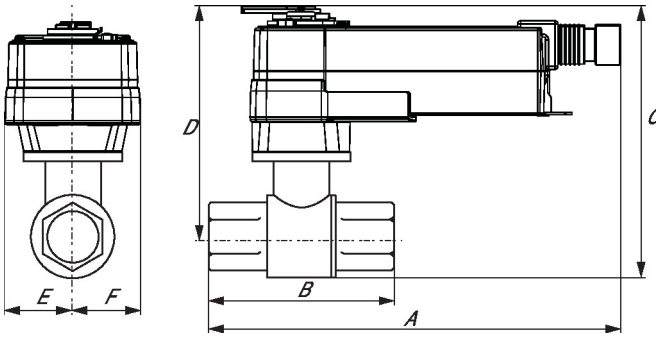


| A | B | C | D | E | F |
|---|---|---|---|---|---|
| 11.8" [299] | 5.8" [148] | 9.1" [231] | 6.6" [168] | 2.0" [51] | 2.0" [51] |

AFRB N4, AFRX N4

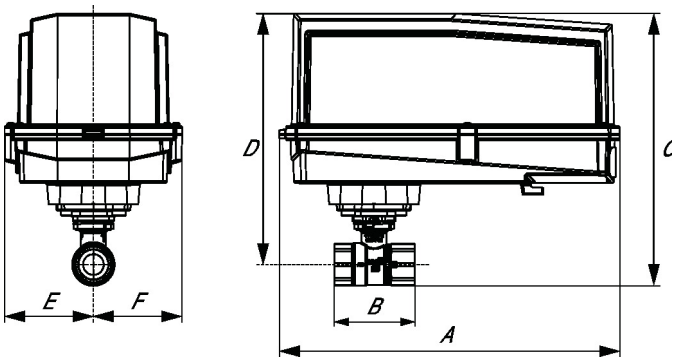


| A | B | C | D | E | F |
|---|---|---|---|---|---|
| 13.0" [330] | 5.8" [148] | 10.3" [262] | 9.3" [235] | 3.4" [86] | 3.4" [86] |

ARB N4, ARX N4, NRB N4, NRX N4

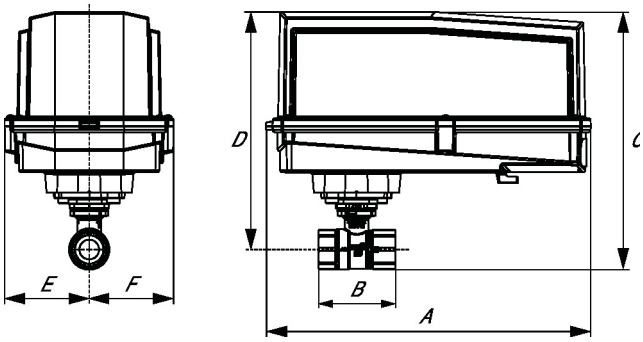


| A | B | D | E | F |
|---|---|---|---|---|
| 11.4" [289] | 5.8" [148] | 8.0" [203] | 3.1" [80] | 3.1" [80] |

ARQB, ARQX

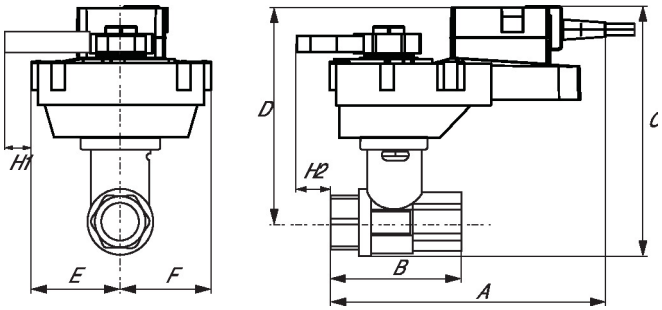


| A | B | C | D | E | F | H1 | H2 |
|---|---|---|---|---|---|---|---|
| 9.9" [251] | 4.2" [107] | 8.6" [219] | 6.1" [155] | 2.3" [58] | 2.3" [58] | 0.8" [20] | 0.6" [15] |

On/Off, Spring return, 24 V

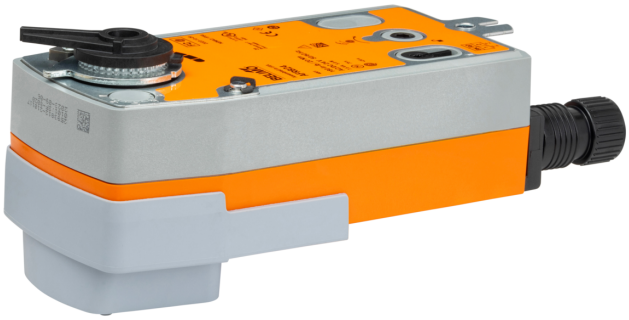

5-year warranty

## Technical data

| | | |
|---|---|---|
| **Electrical data** | Nominal voltage | AC/DC 24 V |
| | Nominal voltage frequency | 50/60 Hz |
| | Nominal voltage range | AC 19.2...28.8 V / DC 21.6...28.8 V |
| | Power consumption in operation | 5 W |
| | Power consumption in rest position | 2.5 W |
| | Transformer sizing | 7.5 VA |
| | Electrical Connection | 18 GA appliance cable, 3 ft [1 m], with 1/2" NPT conduit connector |
| | Overload Protection | electronic throughout 0...95° rotation |
| **Functional data** | Direction of motion motor | selectable by ccw/cw mounting |
| | Direction of motion fail-safe | reversible with cw/ccw mounting |
| | Manual override | 5 mm hex crank (3/16" Allen), supplied |
| | Angle of rotation | 90° |
| | Running Time (Motor) | 75 s / 90° |
| | Running time fail-safe | <20 s |
| | Noise level, motor | 45 dB(A) |
| | Noise level, fail-safe | 62 dB(A) |
| | Position indication | Mechanical |
| **Safety data** | Power source UL | Class 2 Supply |
| | Degree of protection IEC/EN | IP54 |
| | Degree of protection NEMA/UL | NEMA 2 |
| | Enclosure | UL Enclosure Type 2 |
| | Agency Listing | cULus acc. to UL60730-1A/-2-14, CAN/CSA E60730-1:02<br>CE acc. to 2014/30/EU and 2014/35/EU |
| | Quality Standard | ISO 9001 |
| | UL 2043 Compliant | Suitable for use in air plenums per Section 300.22(C) of the NEC and Section 602 of the IMC |
| | Ambient humidity | Max. 95% RH, non-condensing |
| | Ambient temperature | -22...122°F [-30...50°C] |
| | Storage temperature | -40...176°F [-40...80°C] |
| | Servicing | maintenance-free |
| **Weight** | Weight | 5.3 lb [2.4 kg] |
| **Materials** | Housing material | Galvanized steel and plastic housing |

## Technical data

**Footnotes** †Rated Impulse Voltage 800V, Type of action 1.AA, Control Pollution Degree 3

## Electrical installation

**INSTALLATION NOTES**

(A) Actuators with appliance cables are numbered.

(1) Provide overload protection and disconnect as required.

(3) Actuators may also be powered by DC 24 V.

(45) Actuators may be powered in parallel. Power consumption must be observed.

(48) Parallel wiring required for piggy-back applications.

◆ Meets cULus requirements without the need of an electrical ground connection.

**Warning! Live electrical components!**
During installation, testing, servicing and troubleshooting of this product, it may be necessary to work with live electrical components. Have a qualified licensed electrician or other individual who has been properly trained in handling live electrical components perform these tasks. Failure to follow all electrical safety precautions when exposed to live electrical components could result in death or serious injury.
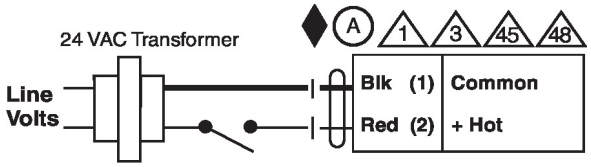
**Wiring diagrams**
On/Off